SPRAY NOZZLES FOR INDUSTRIAL APPLICATIONS

NOZZLES FOR DESCALING

PNR ITALIA SRL

EXPERIENCE, KNOWLEDGE AND QUALITY FOR THE INDUSTRY

PNR ITALIA manufactures and markets small spraying nozzles for individual use up to spraying systems for large industrial plants and is able to meet every customer's need with targeted solutions.
The wide range of products includes spray nozzles, washing heads and complementary accessories such as filters, guns and hoses for industrial washing, ejectors, blow nozzles, joints and hose clamps.

Located in Voghera, not far from Milan, the Headquarter and production plant is located in a strategic area favored by the proximity to the main motorway networks and important international maritime routes, easily accessible from the port of Genoa.

PNR ITALIA started its activity in 1968 with the trade and production of components and spraying nozzles for fire protection systems and, subsequently, with a range of sprayers for industrial applications. Over time it has grown and consolidated through a commercial policy based on a widespread network of partners present in the main foreign markets and also thanks to a continuous investment in research.

Today PNR ITALIA has at its disposal a technologically advanced production plant for the production of spraying nozzles, washing heads and atomizers with absolute quality machines, many of which work with CNC technology, often internally designed for special machining.

With an annual production of about 9 million pieces, PNR ITALIA is a solid industrial reality oriented to constant growth, driven by high-tech investments and product innovation.

INDEX


PNR Headquarters - Voghera (Italy)

DESCALING NOZZLES

DESCALING PRINCIPLES

Descaling nozzles are used for *an efficient scale removal in hot rolling*. The best method is the hydro-mechanical descaling process using high pressure water jets formed by special descaling nozzles. Working pressure range is from 50 to 400 bar (725 to 5.800 psi), for GW type from 30 to 200 bar (435 to 2.900 psi).

The impact of the water jet on the steel hot surface produces an impact force that, combined with the thermal action due to the temperature difference between jets and slabs, generates the descaling effect. The jet quality of the nozzle has a great effect upon the steel surface descaling in hot-rolling and is crucial for the quality of the final product.

DESCALING NOZZLES FEATURE

An efficient scale removal requires the use of proper nozzle designed and manufactured with a special internal profile to provide high values of impact and a consistent flow jet spray along the descaling process. The general composition of a descaling nozzle is shown in the picture at the right.
PNR R&D , improving spray uniformity and reducing secondary spray angle, could achieve an increase of 22 % of impact pressure with respect to former standards.

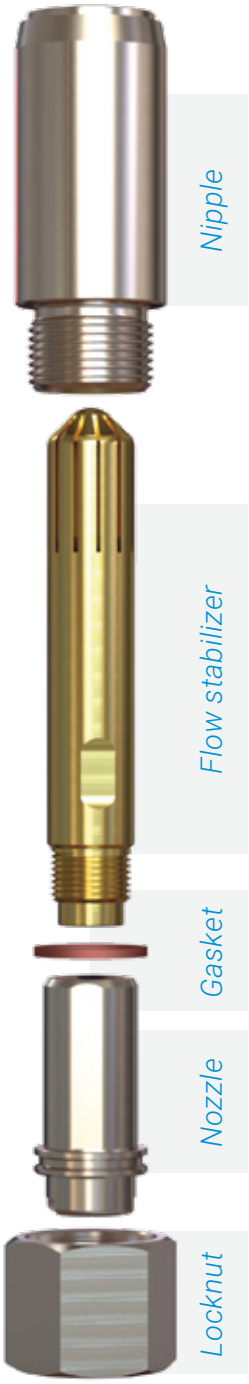

IMPACT FORCE

- Impact force F i is the term used to define the momentum of a fluid vein
- Where Fi = m x ve = (Qe x ρ) x Ve
- Qe = Flow rate (m3 / sec)
- ρ = Fluid density (N.s2 / m4)
- Ve = Fluid speed (m / sec)

For practical purpose, it's common to use the formula

$$Fi^* = 0{,}236 \times Q \times \sqrt{(P)}$$

Where: Q = lt / min P = Kg / cm2 (bar) Fi = Newton

It represents the theoretical impact force of a fluid vein arriving to the nozzle, and does not consider:
A. Internal pressure drop inside the nozzle;
B. Impact force reduction due to the distance between orifice and impact point.
To adjust the real impact force to the former theoretical one, correction factors are used, based on laboratory tests.

IMPACT PRESSURE

When the flat fan spray generated by nozzle hits an area A, it's defined as impact pressure the ratio between the impact force and the area A.

IMPACT MEASUREMENT

Our descaling nozzles are tested by means of a three-dimensional testing machine that measures the spray jet impact and distribution. A load cell, placed at the bottom of the nozzle, moves along the path of the spray jet measuring its force of impact millimeter by millimeter. The pressure values with respect to the surface to be descaled, angle of inclination and offset angle, can be varied according to the technical specifications required by customers.

PNR has designed and manufactured a descaling test bench, with measurement steps adjustable from 0,2 to 2 mm. The output curves of descaling test bench are shown in the following page, and are available on request by customer, specifying required nozzle and flow straightener, working pressure and spray height.

DESCALING TEST BENCH

PNR provides its Customers the possibility to determine the performance of its descaling nozzles using a modern precise measurement of their flow rate at a given pressure.

IMPACT PRESSURE ALONG X AXIS

Effective Alpha Angle = 35,04

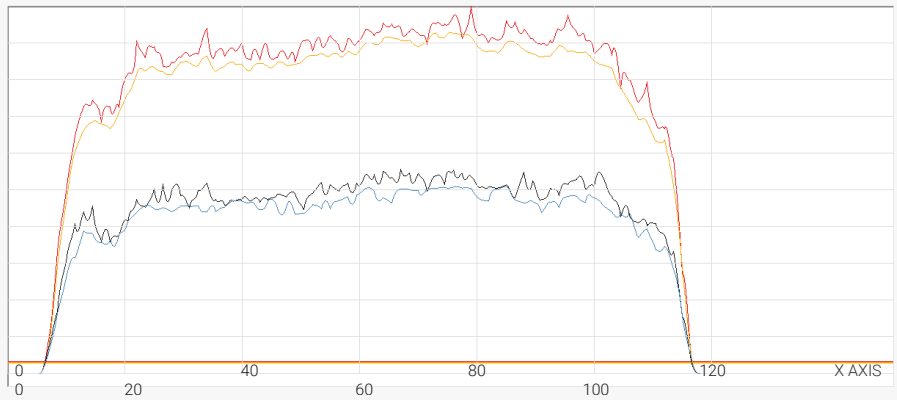

IMPACT PRESSURE ALONG Y AXIS

Effective Beta Angle = 2,95

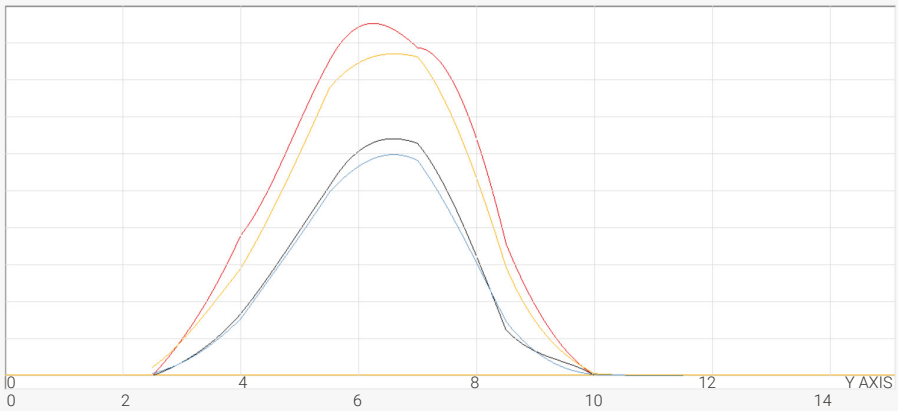

TOP VIEW OF COVERED AREA

Effective impact force [daN]= 7,77698

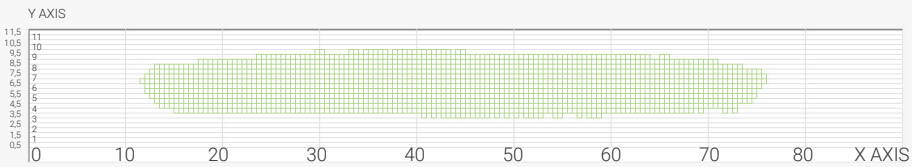

LEGENDA

Maximum pressure value found on the vertical axis intercept.

The rms value is calculated considering the average value of the impact pressure values of the 8 neighbouring points to the specific measuring point, in order to disregard the possible effect of local fluid veins. The orange curve represents the maximum rms value so calculated.

Average pressure value found at the intercept of the vertical axis; therefore, on the axis X (corresponding to the primary spary angle, there will be indicated the average of the values measured along the axis Y (corresponding to the secondary spray angle) in correspondence to that X value.

Average rms value calculated of the pressure measured at the intercept of the vertical axis calculated as above.

3D REPORT

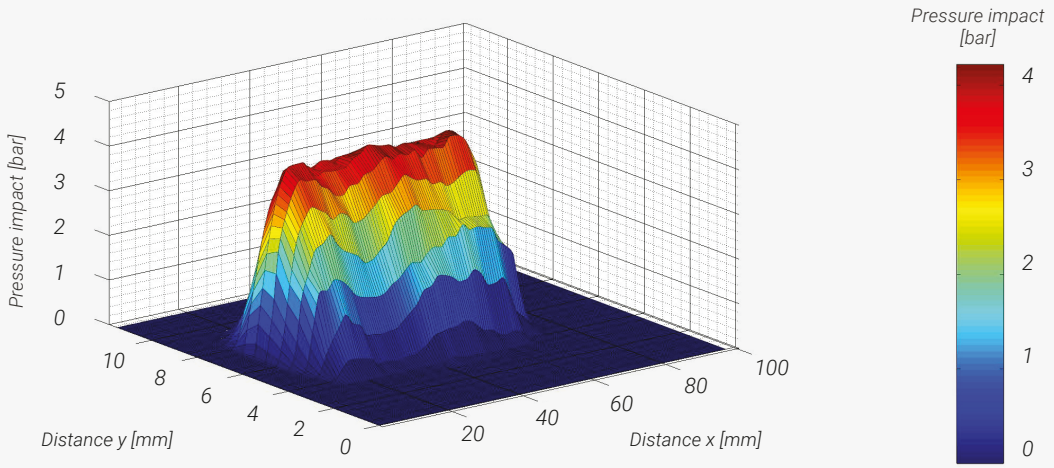

PNR NEW DESCALING NOZZLES

PNR HAS DEVELOPED A NEW RANGE OF HIGH PERFORMANCE DESCALING NOZZLES:

EXTRA-HX ™ Type GB

EVOLUTION OF OUR FORMER MODEL HW/AB

EXTRA-HX ™ Type GK

EVOLUTION OF OUR FORMER MODEL HW/AK

In the new range of PNR
EXTRA-HX TYPE
descaling nozzles the flow straighteners were designed in order to minimize the flow turbulence, with **a related 22% improvement of impact force**.

New nozzle tips design provides an uniform spray density along the spray width, with a reduced value of DP.

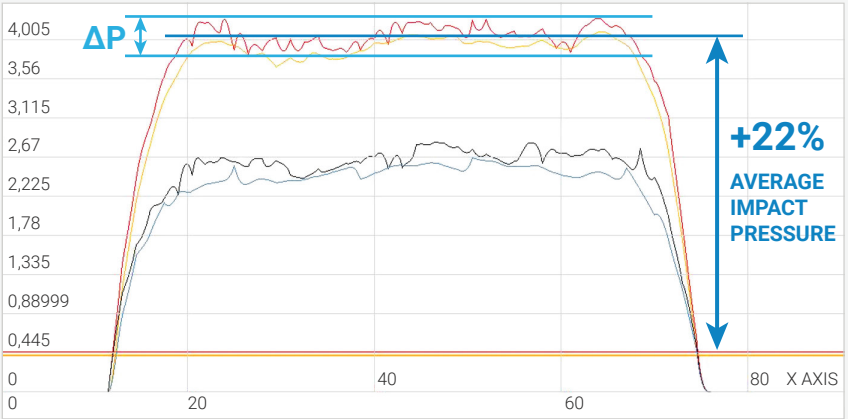

IMPROVED IMPACT PRESSURE, REDUCED ΔP SWINGS

INTERCHANGEABILITY OF COMPONENTS WITH FORMER MODELS

MINI SIZE	EXTRA-HX ™ Type GB	HW/AB
Nozzle thread	3/8 BSPP	M16 x 1,5
Straightener code and thread	3/8 BSPP	M16 x 1,5
Gasket type	VDA 20C1 T3	
Nipple type	ZWA series	
Locknut type	VAW series	

STANDARD SIZE	EXTRA-HX ™ Type GK	HW/AK
Nozzle thread	3/8 BSPP	M16 x 1,5
Straightener code and thread	3/8 BSPP	M16 x 1,5
Gasket type	VDA 24C1 T3	
Nipple type	ZWA series	
Locknut type	VAW series	

DESCALING NOZZLES PERFORMANCES

VALUE OF SPRAY WIDTH B AND C (mm) AT FEEDING PRESSURE 150 BAR RACK ANGLE (β) 15° AND OFFSET ANGLE (γ) 15°										
SPRAY HEIGHT	SPRAY ANGLE									
	22°		26°		30°		34°		40°	
mm	B	C	B	C	B	C	B	C	B	C
80	39	38	46	44	54	52	61	59	73	71
100	48	47	57	55	66	64	75	72	90	87
125	58	56	69	66	79	76	90	87	107	103
150	68	66	81	78	94	91	107	103	128	124
200	85	82	103	99	120	116	136	131	163	157
250	104	100	126	122	146	141	166	160	200	193

Mentioned figures are valid for ranges: HX/GB ; HX/GK ; HX/HV. For remaining ranges values at mentioned pressure, rack and offset angles and at a spray height 150 mm are corresponding to nominal spray angle + 2°

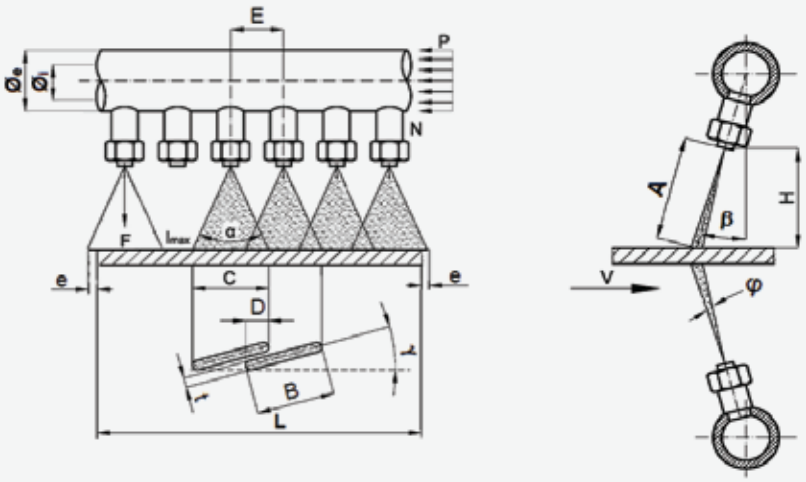

Nozzles Pitch E = Suggested minimum Pitch :

NOZZLE TYPE	MIN. E	NIPPLE	STRAIGHTENER
Code	mm	Code	Code
AA - mini short	45	ZWA	XHW AG
GB - mini long HX series	45	ZWA	XHX DG
AB - mini long	45	ZWA	XHW DG
AH - standard short	60	ZWB	XHW CG
GK - standard long HX series	60	ZWB	XHX DG
AK - standard long	60	ZWB	XHW DG
HV - special	55	ZWC	XHV EG
AM - micro	40	ZWM	XHW MG
GW - dove-tail	60 55 55	ZWW 0120 xx ZWW 0050 xxM ZWW 0040 xxF	None

SPRAY ANGLE TOLERANCE

0 ÷ + 2° at α = 22°; 26°; 30°

0 ÷ + 3° at α = 34°

0 ÷ + 4° at α = 40°

EXTRA-HX ™ Type GB

HIGH IMPACT NOZZLES MINI SIZE

The water path leading to the nozzle orifice has been completely redesigned to reduce energy losses caused by turbulence, all sharp cross section changes have been eliminated resulting in a significant increase in water velocity at the nozzle orifice.

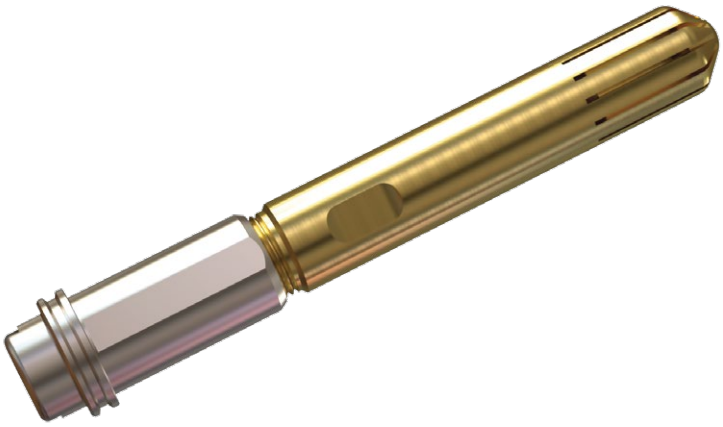

SPRAY ANGLE CODES				
HXC	HXE	HXF	HXK	HXL
22°	26°	30°	34°	40°

MATERIALS			WEIGHT kg *average value
C1	Body	Stainless Steel AISI 303	0,09*
	Insert	Stainless Steel AISI 420 hardened	
F1	Body	Stainless Steel AISI 303	0,09*
	Insert	Tungsten carbide	

SPRAY PATTERN

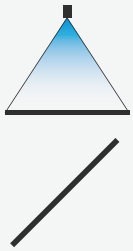

DIMENSIONS OF ASSEMBLED NOZZLES

NIPPLE	ZWA 0032 B2			ZWA 0039 B2			ZWA 0080 B2		
STABILIZER	A	B	C	A	B	C	A	B	C
XHX DG10T1	116	32	68	116	39	61	116	80	20
XHX DG11T1	133	32	85	133	39	78	133	80	37
XHX DG20T1	147	32	99	147	39	92	147	80	51
XHX DG21T1	167	32	119	167	39	112	167	80	71
XHX DG22T1	187	32	139	187	39	132	187	80	91

A = Complete descaling unit length
B = Welding nipple length
C = Flow straightener protrusion

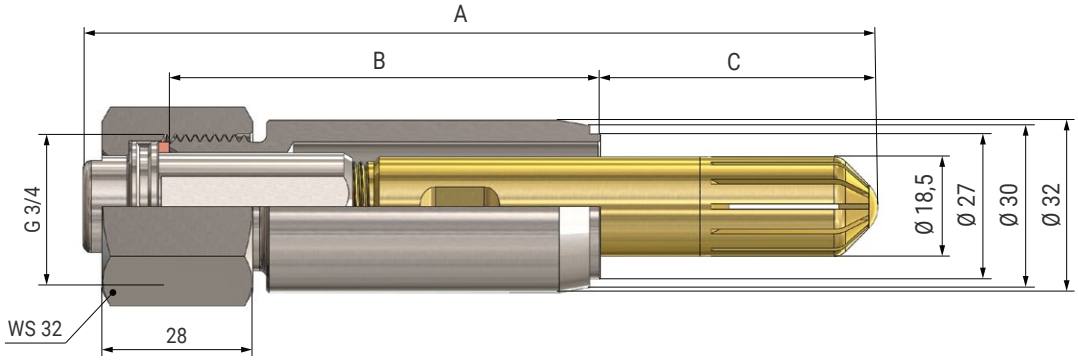

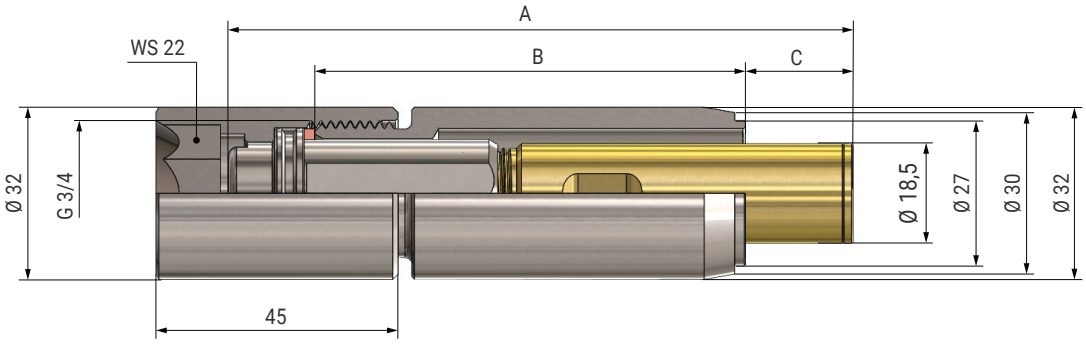

WELDING NIPPLE

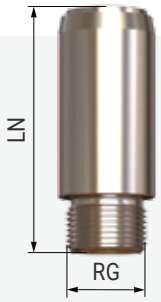

WELDING NIPPLE CODE	RG inch	LN mm	WEIGHT Kg
ZWA 0032 B2	G 3/4	32	0.08
ZWA 0039 B2	G 3/4	39	0.10
ZWA 0080 B2	G 3/4	80	0.23

MATERIALS	
B2	Stainless Steel AISI 304

FLOW STABILIZER

FLOW STABILIZER CODE	LS mm	WEIGHT Kg	NOTES
XHX DG 10 T1	79	0,08	without filter
XHX DG 11 T1	96	0,10	without filter
XHX DG 20 T1	110	0,12	with filter
XHX DG 21 T1	130	0,14	with filter
XHX DG 22 T1	150	0,15	with filter

MATERIALS		
T1	Body	Brass
	Filter	Brass
B31	Flow stabilizer	AISI 316 L s.s.

GASKET

GASKET CODE
VDA 20C1 T3

MATERIALS	
T3	Copper

NOZZLE

NOZZLE CODE	CAPACITY (lpm) PRESSURE (bar)					
	80	140	200	240	300	400
2045xxGB	4,5	5,9	7,2	7,8	8,7	10,0
2063xxGB	6,3	8,3	10,0	10,9	12,2	14,1
2106xxGB	10,6	14,2	16,8	18,4	20,5	23,7
2134xxGB	13,4	17,7	21,2	23,2	25,9	29,9
2162xxGB	16,2	21,4	25,6	28,0	31,4	36,2
2208xxGB	20,8	27,5	32,9	36,0	40,2	46,5
2250xxGB	25,0	33,0	39,5	43,3	48,4	55,9
2320xxGB	32,0	42,3	50,6	55,4	62,0	71,6
2402xxGB	40,2	53,2	63,6	69,6	77,8	89,9
2520xxGB	52,0	68,8	82,2	90,0	101	116
2642xxGB	64,2	84,9	102	111	124	144
2798xxGB	79,8	106	126	138	155	178
2996xxGB	99,6	132	157	173	193	223
3112xxGB	112	148	177	194	217	250
3120xxGB	120	159	190	208	232	268

LOCKNUT

LOCKNUT CODE	NOTES	WEIGHT kg *average value
VAW A075 B1	outside hexagon	0,09*
VAW C075 B1	built in hexagon	0,13 *

MATERIALS	
B1	AISI 303 s.s.

HOW TO ORDER PNR PRODUCTS

MODEL	SPRAY ANGLE	CAPACITY	MATERIAL	TYPE
HX	C	2045	XX	GB

ORDER EXAMPLE
HXC 2045 F1GB

EXTRA-HX ™ Type GK

HIGH IMPACT NOZZLES STANDARD SIZE

The water path leading to the nozzle orifice has been completely redesigned to reduce energy losses caused by turbulence, all sharp cross section changes have been eliminated resulting in a significant increase in water velocity at the nozzle orifice.

SPRAY ANGLE CODES				
HXC	HXE	HXF	HXK	HXL
22°	26°	30°	34°	40°

MATERIALS			WEIGHT kg *average value
C1	Body	Stainless Steel AISI 303	0,14*
	Insert	Stainless Steel AISI 420 hardened	
F1	Body	Stainless Steel AISI 303	0,14*
	Insert	Tungsten carbide	

SPRAY PATTERN

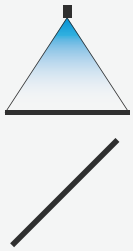

DIMENSIONS OF ASSEMBLED NOZZLES

NIPPLE	ZWB 0073 B2			ZWB 0100 B2			ZWB 0120 B2		
STABILIZER	A	B	C	A	B	C	A	B	C
XHX DG10T1	116	73	27	116	100	0	116	120	0
XHX DG11T1	133	73	44	133	100	17	133	120	0
XHX DG20T1	147	73	58	147	100	31	147	120	11
XHX DG21T1	167	73	78	167	100	51	167	120	31
XHX DG22T1	187	73	98	187	100	71	187	120	51

A = Complete descaling unit length
B = Welding nipple length
C = Flow straightener protrusion

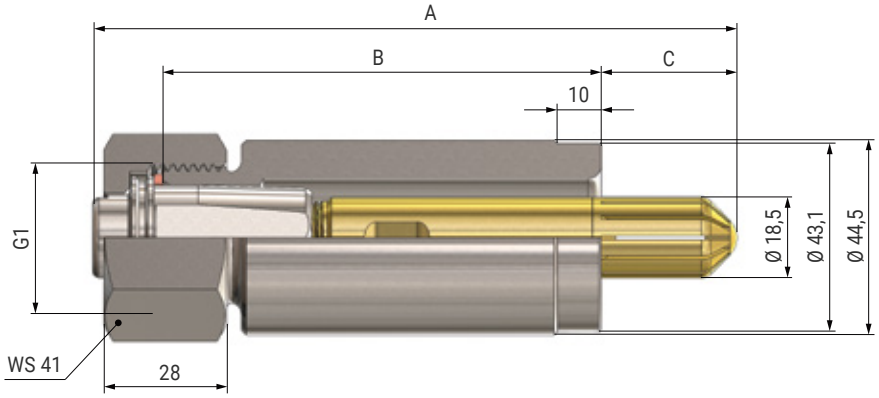

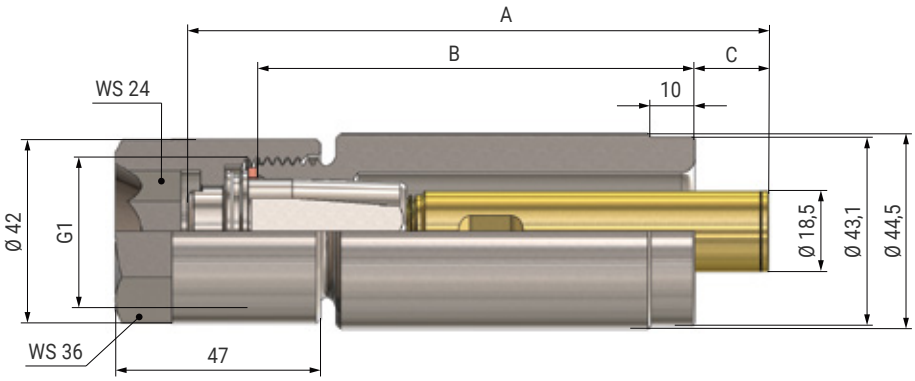

WELDING NIPPLE

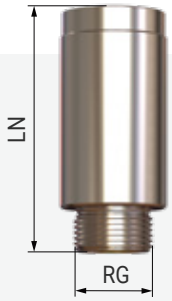

WELDING NIPPLE CODE	RG inch	LN mm	WEIGHT Kg
ZWB 0073 B2	G 1	73	0.49
ZWB 0100 B2	G 1	100	0.71
ZWB 0120 B2	G 1	120	0.85

MATERIALS	
B2	Stainless Steel AISI 304

FLOW STABILIZER

FLOW STABILIZER CODE	LS mm	WEIGHT Kg	NOTES
XHX DG 10 T1	79	0,08	without filter
XHX DG 11 T1	96	0,10	without filter
XHX DG 20 T1	110	0,12	with filter
XHX DG 21 T1	130	0,14	with filter
XHX DG 22 T1	150	0,15	with filter

MATERIALS		
T1	Body	Brass
	Filter	Brass
B31	Flow stabilizer	AISI 316 L s.s.

GASKET

GASKET CODE
VDA 24C1 T3

MATERIALS	
T3	Copper

NOZZLE

NOZZLE CODE	CAPACITY (lpm) PRESSURE (bar)					
	80	140	200	240	300	400
2045xxGK	4,5	5,9	7,2	7,8	8,7	10,0
2063xxGK	6,3	8,3	10,0	10,9	12,2	14,1
2106xxGK	10,6	14,2	16,8	18,4	20,5	23,7
2134xxGK	13,4	17,7	21,2	23,2	25,9	29,9
2162xxGK	16,2	21,4	25,6	28,0	31,4	36,2
2208xxGK	20,8	27,5	32,9	36,0	40,2	46,5
2250xxGK	25,0	33,0	39,5	43,3	48,4	55,9
2320xxGK	32,0	42,3	50,6	55,4	62,0	71,6
2402xxGK	40,2	53,2	63,6	69,6	77,8	89,9
2520xxGK	52,0	68,8	82,2	90,0	101	116
2642xxGK	64,2	84,9	102	111	124	144
2798xxGK	79,8	106	126	138	155	178
2996xxGK	99,6	132	157	173	193	223
3112xxGK	112	148	177	194	217	250
3120xxGK	120	159	190	208	232	268

LOCKNUT

LOCKNUT CODE	NOTES	WEIGHT kg *average value
VAW B100 B1	outside hexagon	0,16*
VAW D100 B1	built in hexagon	0,25 *

MATERIALS	
B1	AISI 303 s.s.

HOW TO ORDER PNR PRODUCTS

MODEL	SPRAY ANGLE	CAPACITY	MATERIAL	TYPE
HX	C	2045	XX	GK

ORDER EXAMPLE
HXC 2045 F1GK

Type GW

DOVE-TAIL NOZZLES

GW series nozzles have been the worldwide standard for many years in hot descaling mills. They have undergone many improvements, specifically to the inner orifice profile, resulting in a very even distribution of the water jet impact onto the steel surface. Their typical design with a dove-tail coupling between nipple and nozzle tip assures for correct alignment of the nozzle onto the spray manifold. Several nipples length value and a specific locknut allow for a wide choice of different assembly dimensions.

SPRAY ANGLE CODES			
GWC	GWE	GWF	GWL
22°	26°	30°	40°

MATERIALS			WEIGHT kg *average value
C1	Body	Stainless Steel AISI 303	0,07*
	Insert	Stainless Steel AISI 420 hardened	
F1	Body	Stainless Steel AISI 303	0,08*
	Insert	Tungsten carbide	

SPRAY PATTERN

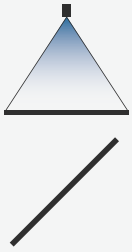

OFFSET ANGLE

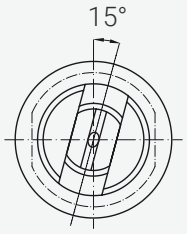

HOW TO ORDER PNR PRODUCTS

MODEL	SPRAY ANGLE	CAPACITY	MATERIAL
GW	C	2162	XX

ORDER EXAMPLE
GWC 2162 C1

CONVERSION TABLE (UE - USA)

PRESSURE	CAPACITY
1 bar = 14,5 psi	1 lpm = 0,264 gpm

WELDING NIPPLE

WELDING NIPPLE CODE	RG inch	LN mm	WEIGHT Kg
ZWW 0120 B31	1	120	0.90
ZWW 0050 B31M	1	50	0.22
ZWW 0040 B31F	1	40	0.18

MATERIALS	
B31	Stainless Steel AISI 316L

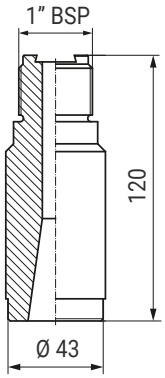

ZWW 0120 B31

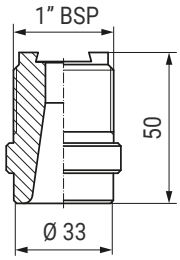

ZWW 0050 B31M

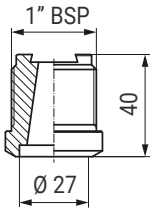

ZWW 0040 B31F

NOZZLE

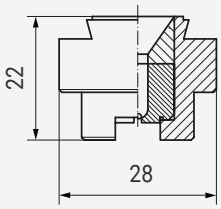

NOZZLE CODE	CAPACITY (lpm) PRESSURE (bar)					
	80	140	200	240	300	400
2162xx	16,2	21,4	25,6	28,0	31,4	36,2
2208xx	20,8	27,5	32,9	36,0	40,2	46,5
2250xx	25,0	33,0	39,5	43,3	48,4	55,9
2320xx	32,0	42,3	50,6	55,4	62,0	71,6
2402xx	40,2	53,2	63,6	69,6	77,8	89,9
2520xx	52,0	68,8	82,2	90,0	101	116
2642xx	64,2	84,9	102	111	124	144
2798xx	79,8	106	126	138	155	178
2996xx	99,6	132	157	173	193	223
3112xx	112	148	177	194	217	250
3120xx	120	159	190	208	232	268

LOCKNUT

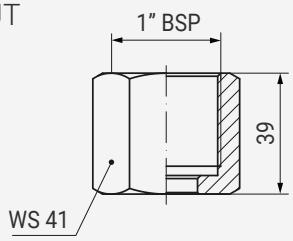

LOCKNUT CODE	MATERIALS		WEIGHT kg *average value
VAA 1001 B1B	B1	AISI 303 s.s.	0.22*

Type AA

SHORT NOZZLES
MINI SIZE

The modern design of these nozzle offers the same advantage as the full size HW nozzles. In addition it makes possible to use a smaller pitch between the nozzles allowing for a higher impact value per unit length. The nozzle efficiency is enhanced by means of a carefully designed flow stabilizer, which minimizes turbulence due to sharp direction change at the inlet from the main manifold. Provision is also made for a filter to be mounted at the nozzle inlet, minimizing nozzle clogging and abrasion.

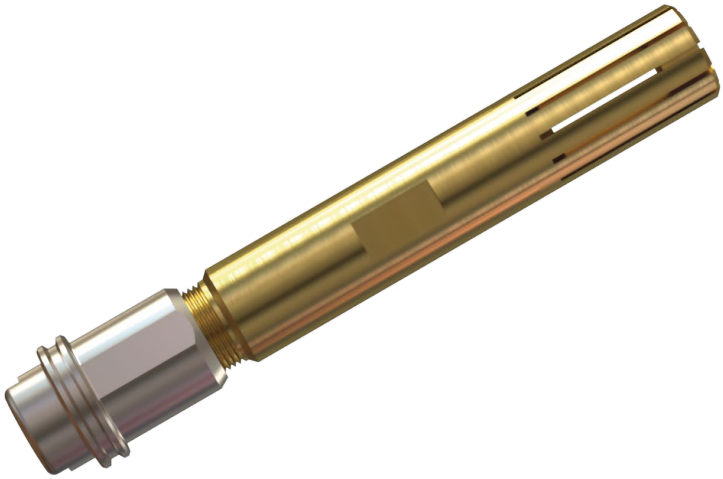

SPRAY ANGLE CODES			
HWC	HWE	HWF	HWL
22°	26°	30°	40°

MATERIALS			WEIGHT kg *average value
C1	Body	Stainless Steel AISI 303	0,07*
	Insert	Stainless Steel AISI 420 hardened	
F1	Body	Stainless Steel AISI 303	0,08*
	Insert	Tungsten carbide	

SPRAY PATTERN

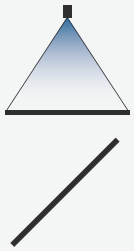

DIMENSIONS OF ASSEMBLED NOZZLES

NIPPLE	ZWA 0032 B2			ZWA 0039 B2			ZWA 0080 B2		
STABILIZER	A	B	C	A	B	C	A	B	C
XHW AG10T1	97	32	48,5	97	39	41,5	97	80	0.5
XHW AG20T1	133	32	85	133	39	78	133	80	37
XHW AG21T1	153	32	105	153	39	98	153	80	57

A = Complete descaling unit length
B = Welding nipple length
C = Flow straightener protrusion

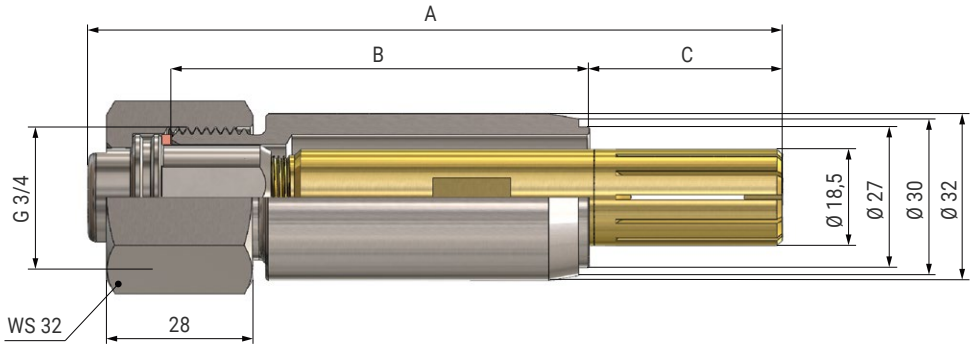

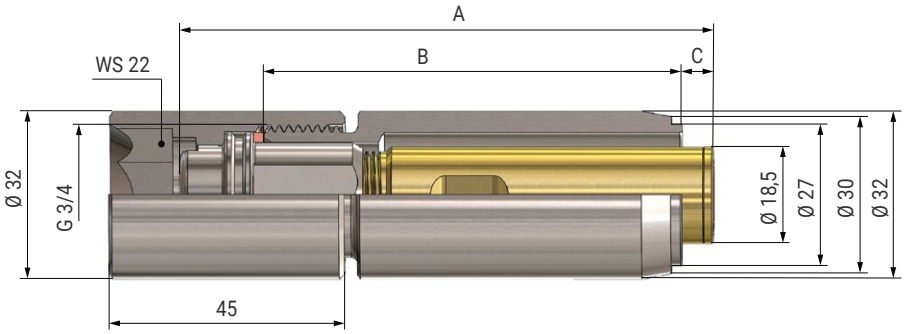

WELDING NIPPLE

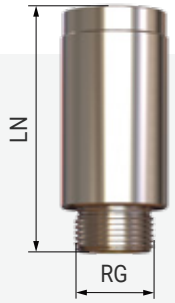

WELDING NIPPLE CODE	RG inch	LN mm	WEIGHT Kg
ZWA 0032 B2	G 3/4	32	0.06
ZWA 0039 B2	G 3/4	39	0.08
ZWA 0080 B2	G 3/4	80	0.19

MATERIALS	
B2	Stainless Steel AISI 304

FLOW STABILIZER

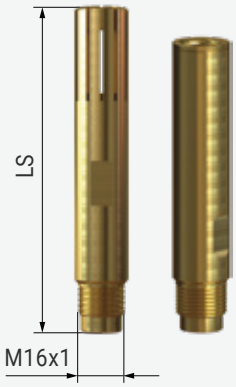

FLOW STABILIZER CODE	LS mm	WEIGHT Kg	NOTES
XHW AG 10 T1	74	0,09	without filter
XHW AG 20 T1	110	0,14	with filter
XHW AG 21 T1	130	0,16	with filter

MATERIALS		
T1	Body	Brass
	Filter	Brass
B31	Flow stabilizer	AISI 316 L s.s.

GASKET

GASKET CODE
VDA 20C1 T3

MATERIALS	
T3	Copper

NOZZLE

NOZZLE CODE	CAPACITY (lpm) PRESSURE (bar)					
	80	140	200	240	300	400
2045xxAA	4,5	5,9	7,2	7,8	8,7	10,0
2063xxAA	6,3	8,3	10,0	10,9	12,2	14,1
2106xxAA	10,6	14,2	16,8	18,4	20,5	23,7
2134xxAA	13,4	17,7	21,2	23,2	25,9	29,9
2162xxAA	16,2	21,4	25,6	28,0	31,4	36,2
2208xxAA	20,8	27,5	32,9	36,0	40,2	46,5
2250xxAA	25,0	33,0	39,5	43,3	48,4	55,9
2320xxAA	32,0	42,3	50,6	55,4	62,0	71,6
2402xxAA	40,2	53,2	63,6	69,6	77,8	89,9
2520xxAA	52,0	68,8	82,2	90,0	101	116
2642xxAA	64,2	84,9	102	111	124	144
2798xxAA	79,8	106	126	138	155	178
2996xxAA	99,6	132	157	173	193	223
3112xxAA	112	148	177	194	217	250
3120xxAA	120	159	190	208	232	268

LOCKNUT

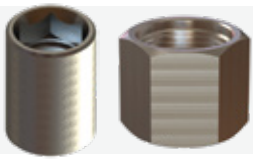

LOCKNUT CODE	NOTES	WEIGHT kg *average value
VAW A075 B1	outside hexagon	0,09*
VAW C075 B1	built in hexagon	0,12 *

MATERIALS	
B1	AISI 303 s.s.

HOW TO ORDER PNR PRODUCTS

MODEL	SPRAY ANGLE	CAPACITY	MATERIAL	TYPE
HW	C	2045	XX	AA

ORDER EXAMPLE
HWC 2045 F1AA

Type AB

HIGH IMPACT NOZZLES MINI SIZE

The water path leading to the nozzle orifice has been completely redesigned to reduce energy losses caused by turbulence, all sharp cross section changes have been eliminated resulting in a significant increase in water velocity at the nozzle orifice.
The afore mentioned advantages are added to those offered by a carefully designed flow stabilizer and a filter when assembled to the nipple inlet, minimizing clogging and abrasion of the nozzle orifice.

SPRAY ANGLE CODES			
HWC	HWE	HWF	HWL
22°	26°	30°	40°

MATERIALS			WEIGHT kg *average value
C1	Body	Stainless Steel AISI 303	0,10*
	Insert	Stainless Steel AISI 420 hardened	
F1	Body	Stainless Steel AISI 303	0,11*
	Insert	Tungsten carbide	

SPRAY PATTERN

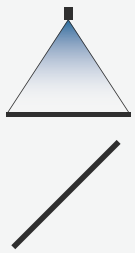

DIMENSIONS OF ASSEMBLED NOZZLES

NIPPLE	ZWA 0032 B2			ZWA 0039 B2			ZWA 0080 B2		
STABILIZER	A	B	C	A	B	C	A	B	C
XHW DG10 T1	115	32	67	115	39	60	115	80	19
XHW DG11 T1	135	32	87	135	39	80	135	80	39
XHW DG20 T1	149	32	101	149	39	94	149	80	53
XHW DG21 T1	169	32	121	169	39	114	169	80	73
XHW DG21 T1	189	32	141	189	39	134	189	80	93

A = Complete descaling unit length
B = Welding nipple length
C = Flow straightener protrusion

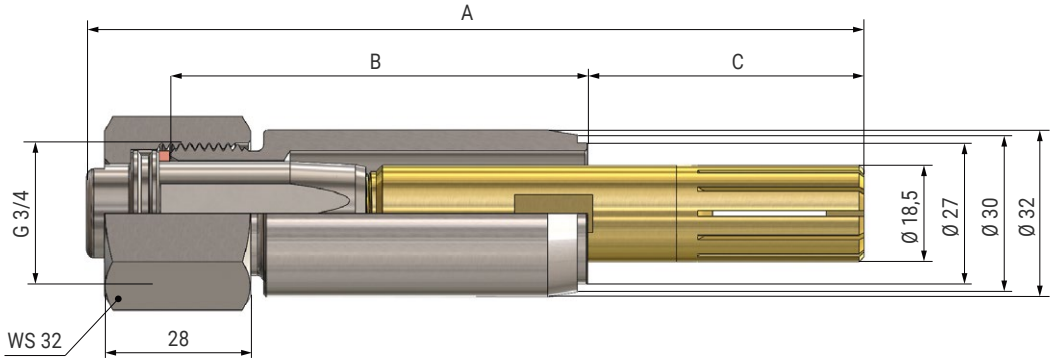

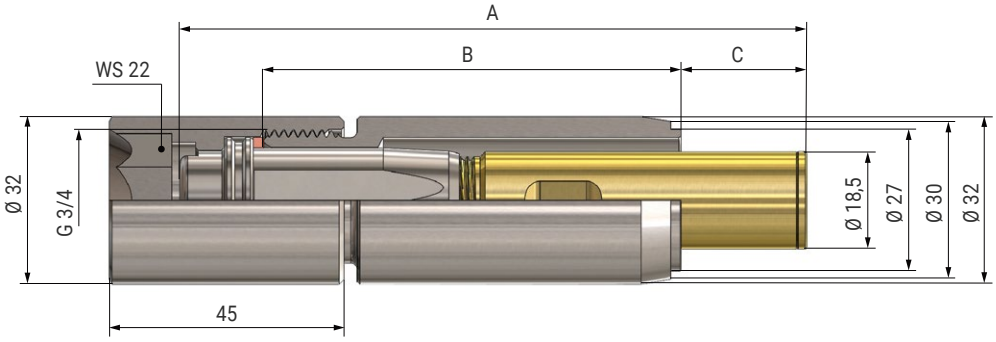

WELDING NIPPLE

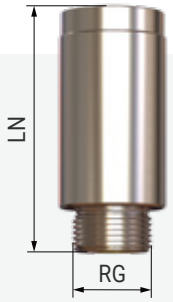

WELDING NIPPLE CODE	RG inch	LN mm	WEIGHT Kg
ZWA 0032 B2	G 3/4	32	0.06
ZWA 0039 B2	G 3/4	39	0.08
ZWA 0080 B2	G 3/4	80	0.19

MATERIALS	
B2	Stainless Steel AISI 304

FLOW STABILIZER

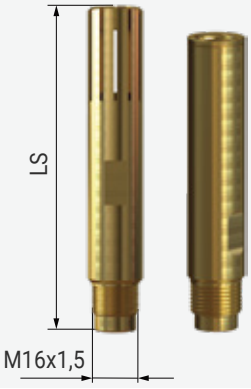

FLOW STABILIZER CODE	LS mm	WEIGHT Kg	NOTES
XHW DG10 T1	76	0,08	without filter
XHW DG11 T1	96	0.10	without filter
XHW DG20 T1	110	0,11	with filter
XHW DG21 T1	130	0,14	with filter
XHW DG22 T1	150	0.16	with filter

MATERIALS		
T1	Body	Brass
	Filter	Brass
B31	Flow stabilizer	AISI 316 L s.s.

GASKET

GASKET CODE
VDA 20C1 T3

MATERIALS	
T3	Copper

NOZZLE

NOZZLE CODE	CAPACITY (lpm) PRESSURE (bar)					
	80	140	200	240	300	400
2045xxAB	4,5	5,9	7,2	7,8	8,7	10,0
2063xxAB	6,3	8,3	10,0	10,9	12,2	14,1
2106xxAB	10,6	14,2	16,8	18,4	20,5	23,7
2134xxAB	13,4	17,7	21,2	23,2	25,9	29,9
2162xxAB	16,2	21,4	25,6	28,0	31,4	36,2
2208xxAB	20,8	27,5	32,9	36,0	40,2	46,5
2250xxAB	25,0	33,0	39,5	43,3	48,4	55,9
2320xxAB	32,0	42,3	50,6	55,4	62,0	71,6
2402xxAB	40,2	53,2	63,6	69,6	77,8	89,9
2520xxAB	52,0	68,8	82,2	90,0	101	116
2642xxAB	64,2	84,9	102	111	124	144
2798xxAB	79,8	106	126	138	155	178
2996xxAB	99,6	132	157	173	193	223
3112xxAB	112	148	177	194	217	250
3120xxAB	120	159	190	208	232	268

LOCKNUT

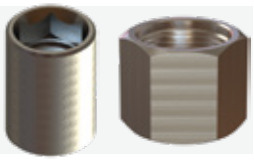

LOCKNUT CODE	NOTES	WEIGHT kg *average value
VAW A075 B1	outside hexagon	0,09*
VAW C075 B1	built in hexagon	0,12 *

MATERIALS	
B1	AISI 303 s.s.

HOW TO ORDER PNR PRODUCTS

MODEL	SPRAY ANGLE	CAPACITY	MATERIAL	TYPE
HW	C	2045	XX	AB

ORDER EXAMPLE
HWC 2045 F1AB

Type AH

SHORT NOZZLES STANDARD SIZE

The modern design of these nozzle offers the convenience of a more rational alignment system, with a copper seal used between nipple and nozzle tip. The nozzle efficiency is enhaced by means of a carefully designed flow stabilizer, which minimizes turbulence due to sharp direction change at the inlet from the main manifold. Provision is also made for a filter to be mounted at the nozzle inlet, minimizing nozzle clogging and abrasion.

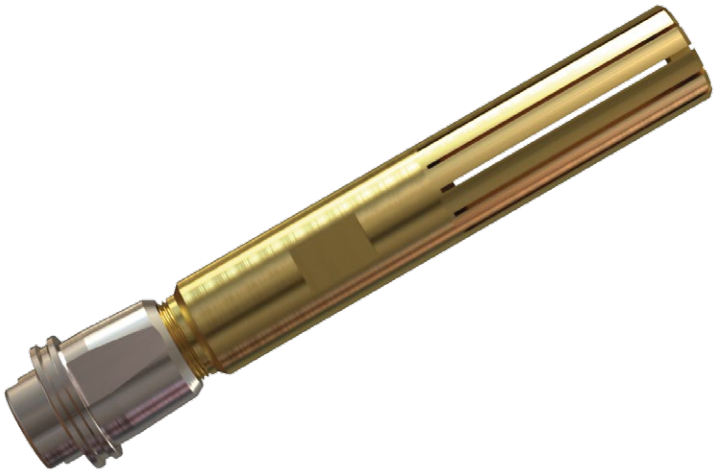

SPRAY ANGLE CODES			
HWC	HWE	HWF	HWL
22°	26°	30°	40°

MATERIALS			WEIGHT kg *average value
C1	Body	Stainless Steel AISI 303	0,08*
	Insert	Stainless Steel AISI 420 hardened	
F1	Body	Stainless Steel AISI 303	0,09*
	Insert	Tungsten carbide	

SPRAY PATTERN

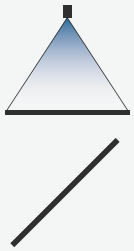

DIMENSIONS OF ASSEMBLED NOZZLES

NIPPLE	ZWB 0073 B2			ZWB 0100 B2			ZWB 0120 B2		
STABILIZER	A	B	C	A	B	C	A	B	C
XHW CG10 T1	96.5	73	7.5	116	100	0	136	120	0
XHW CG20 T1	133	73	44	133	100	17	136	120	0
XHW CG21 T1	153	73	64	153	100	37	153	120	17

A = Complete descaling unit length
B = Welding nipple length
C = Flow straightener protrusion

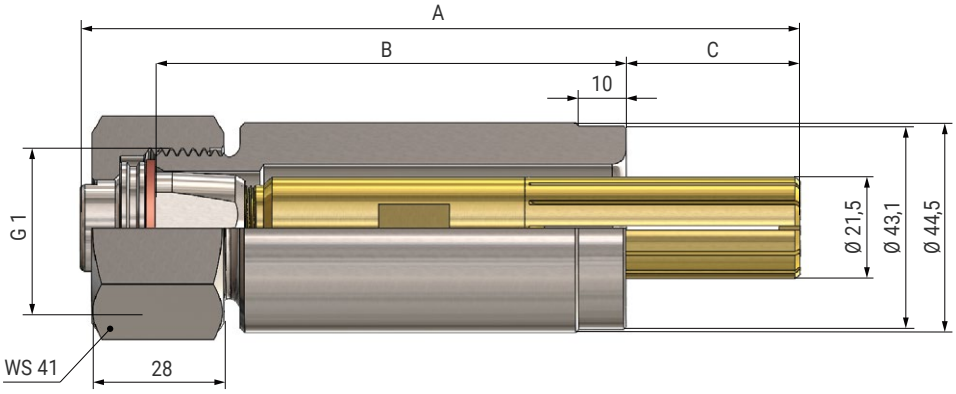

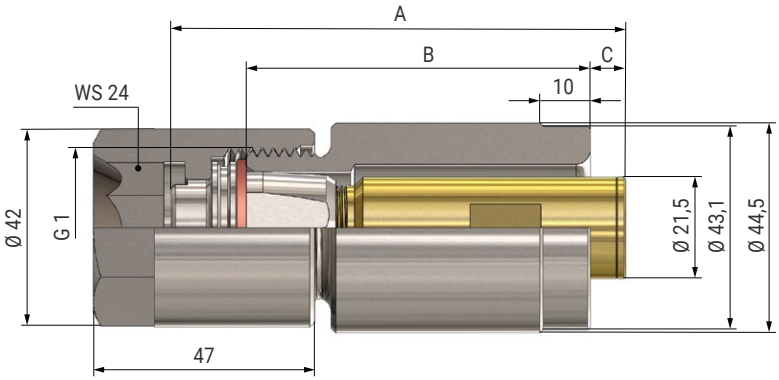

WELDING NIPPLE

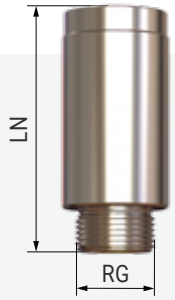

WELDING NIPPLE CODE	RG inch	LN mm	WEIGHT Kg
ZWB 0073 B2	G 1	73	0.48
ZWB 0100 B2	G 1	100	0.70
ZWB 0120 B2	G 1	120	0.84

MATERIALS	
B2	Stainless Steel AISI 304

FLOW STABILIZER

FLOW STABILIZER CODE	LS mm	WEIGHT Kg	NOTES
XHW CG10 T1	74	0,12	without filter
XHWCG20 T1	110,5	0,18	with filter
XHW CG21 T1	130,5	0,20	with filter

MATERIALS		
T1	Body	Brass
	Filter	Brass
B31	Flow stabilizer	AISI 316 L s.s.

GASKET

GASKET CODE
VDA 24C1 T3

MATERIALS	
T3	Copper

NOZZLE

NOZZLE CODE	CAPACITY (lpm) PRESSURE (bar)					
	80	140	200	240	300	400
2045xxAH	4,5	5,9	7,2	7,8	8,7	10,0
2063xxAH	6,3	8,3	10,0	10,9	12,2	14,1
2106xxAH	10,6	14,2	16,8	18,4	20,5	23,7
2134xxAH	13,4	17,7	21,2	23,2	25,9	29,9
2162xxAH	16,2	21,4	25,6	28,0	31,4	36,2
2208xxAH	20,8	27,5	32,9	36,0	40,2	46,5
2250xxAH	25,0	33,0	39,5	43,3	48,4	55,9
2320xxAH	32,0	42,3	50,6	55,4	62,0	71,6
2402xxAH	40,2	53,2	63,6	69,6	77,8	89,9
2520xxAH	52,0	68,8	82,2	90,0	101	116
2642xxAH	64,2	84,9	102	111	124	144
2798xxAH	79,8	106	126	138	155	178
2996xxAH	99,6	132	157	173	193	223
3112xxAH	112	148	177	194	217	250
3120xxAH	120	159	190	208	232	268

LOCKNUT

LOCKNUT CODE	NOTES	WEIGHT kg *average value
VAW B100 B1	outside hexagon	0,16*
VAW D100 B1	built in hexagon	0,24 *

MATERIALS	
B1	AISI 303 s.s.

HOW TO ORDER PNR PRODUCTS

MODEL	SPRAY ANGLE	CAPACITY	MATERIAL	TYPE
HW	C	2045	XX	AH

ORDER EXAMPLE
HWC 2045 F1AH

Type AK

HIGH IMPACT NOZZLES STANDARD SIZE

The water path leading to the nozzle orifice has been completely redesigned to reduce energy losses caused by turbulence, all sharp cross section changes have been eliminated resulting in a significant increase in water velocity at the nozzle orifice.
The afore mentioned advantages are added to those offered by a carefully designed flow stabilizer and a filter when assembled to the nipple inlet, minimizing clogging and abrasion of the nozzle orifice.

SPRAY ANGLE CODES			
HWC	HWE	HWF	HWL
22°	26°	30°	40°

MATERIALS			WEIGHT kg *average value
C1	Body	Stainless Steel AISI 303	0,14*
	Insert	Stainless Steel AISI 420 hardened	
F1	Body	Stainless Steel AISI 303	0,15*
	Insert	Tungsten carbide	

SPRAY PATTERN

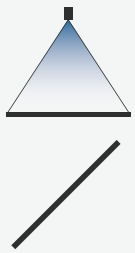

DIMENSIONS OF ASSEMBLED NOZZLES

NIPPLE	ZWB 0073 B2			ZWB 0100 B2			ZWB 0120 B2		
STABILIZER	A	B	C	A	B	C	A	B	C
XHW DG10 T1	115	73	26	115	100	0	115	120	0
XHW DG11 T1	135	73	46	135	100	19	135	120	0
XHW DG20 T1	149	73	60	149	100	33	149	120	13
XHW DG21 T1	169	73	80	169	100	53	169	120	33
XHW DG21 T1	189	73	100	189	100	73	189	120	53

A = Complete descaling unit length
B = Welding nipple length
C = Flow straightener protrusion

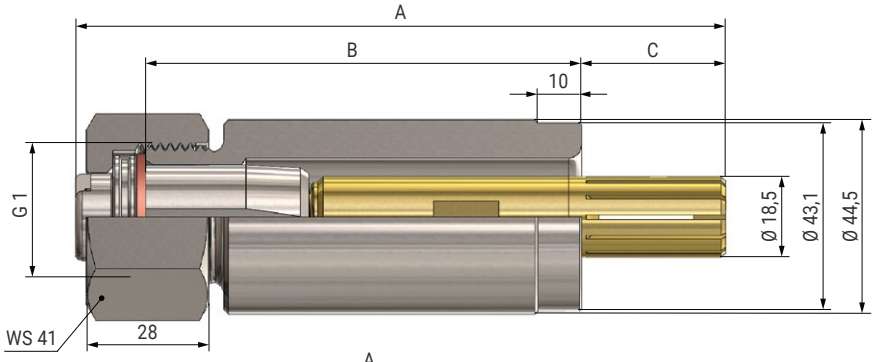

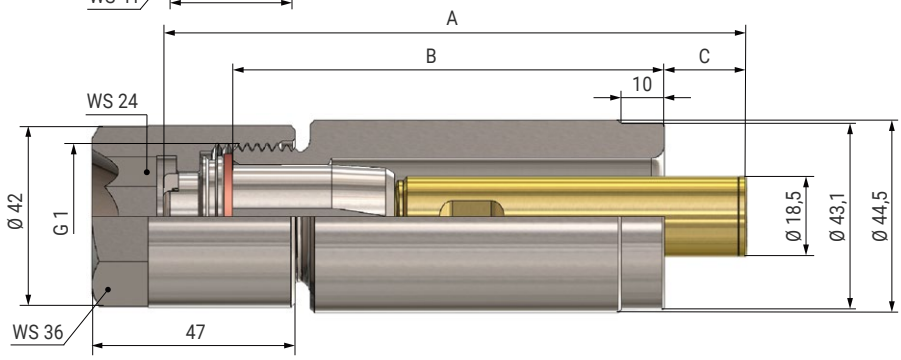

WELDING NIPPLE

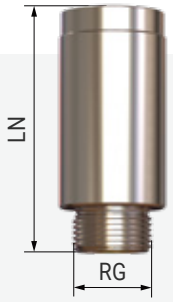

WELDING NIPPLE CODE	RG inch	LN mm	WEIGHT Kg
ZWB 0073 B2	G 1	73	0.48
ZWB 0100 B2	G 1	100	0.70
ZWB 0120 B2	G 1	120	0.84

MATERIALS	
B2	Stainless Steel AISI 304

FLOW STABILIZER

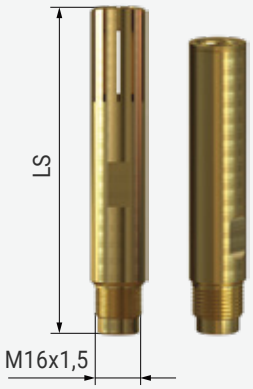

FLOW STABILIZER CODE	LS mm	WEIGHT Kg	NOTES
XHW DG10 T1	76	0,08	without filter
XHW DG11 T1	96	0.10	without filter
XHW DG20 T1	110	0,11	with filter
XHW DG21 T1	130	0,14	with filter
XHW DG22 T1	150	0.15	with filter

MATERIALS		
T1	Body	Brass
	Filter	Brass
B31	Flow stabilizer	AISI 316 L s.s.

GASKET

GASKET CODE
VDA 24C1 T3

MATERIALS	
T3	Copper

NOZZLE

NOZZLE CODE	CAPACITY (lpm) PRESSURE (bar)					
	80	140	200	240	300	400
2045xxAK	4,5	5,9	7,2	7,8	8,7	10,0
2063xxAK	6,3	8,3	10,0	10,9	12,2	14,1
2106xxAK	10,6	14,2	16,8	18,4	20,5	23,7
2134xxAK	13,4	17,7	21,2	23,2	25,9	29,9
2162xxAK	16,2	21,4	25,6	28,0	31,4	36,2
2208xxAK	20,8	27,5	32,9	36,0	40,2	46,5
2250xxAK	25,0	33,0	39,5	43,3	48,4	55,9
2320xxAK	32,0	42,3	50,6	55,4	62,0	71,6
2402xxAK	40,2	53,2	63,6	69,6	77,8	89,9
2520xxAK	52,0	68,8	82,2	90,0	101	116
2642xxAK	64,2	84,9	102	111	124	144
2798xxAK	79,8	106	126	138	155	178
2996xxAK	99,6	132	157	173	193	223
3112xxAK	112	148	177	194	217	250
3120xxAK	120	159	190	208	232	268

LOCKNUT

LOCKNUT CODE	NOTES	WEIGHT kg *average value
VAW B100 B1	outside hexagon	0,16*
VAW D100 B1	built in hexagon	0,24 *

MATERIALS	
B1	AISI 303 s.s.

HOW TO ORDER PNR PRODUCTS

MODEL	SPRAY ANGLE	CAPACITY	MATERIAL	TYPE
HW	C	2045	XX	AK

ORDER EXAMPLE
HWC 2045 F1AK

Type HV/AX

HIGH IMPACT NOZZLES SPECIAL SIZE

High Impact nozzles are widely used in hot rolling processes as they provide an adequate impact for a consistent descaling. The modern design of these nozzles offers the convenience of a more rational alignment system which allows a copper seal to be used between nipple and nozzle tip. The nozzle efficiency is enhaced by means of a carefully designed flow stabilizer, which minimizes turbulence due to sharp direction change at the inlet from the main manifold. Provision is also made for a filter to be mounted at the nozzle inlet, minimizing nozzle clogging and abrasion.

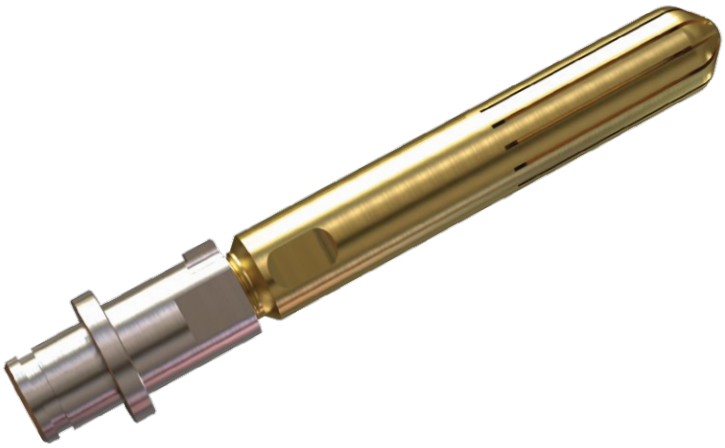

SPRAY ANGLE CODES				
HVC	HVE	HVF	HVK	HVL
22°	26°	30°	34°	40°

MATERIALS			WEIGHT kg *average value
F1	Body	Stainless Steel AISI 303	0,13*
	Insert	Tungsten carbide	

SPRAY PATTERN

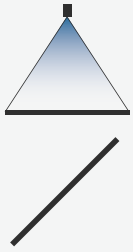

DIMENSIONS OF ASSEMBLED NOZZLES

NIPPLE	ZWC 0062 B2			ZWC 0066 B2		
STABILIZER	A	B	C	A	B	C
XHV EG30 T1	130	62	87	130	66	83
XHV EG31 T1	175	62	87	175	66	83

A = Complete descaling unit length
B = Welding nipple length
C = Flow straightener protrusion

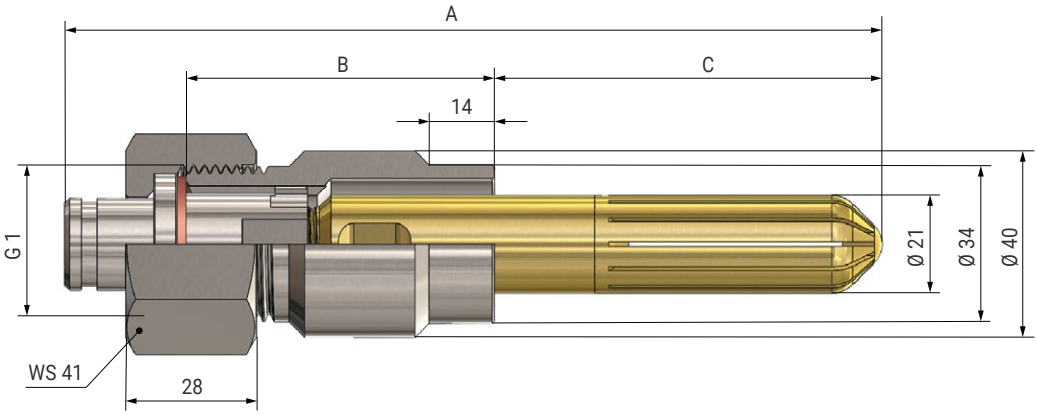

WELDING NIPPLE

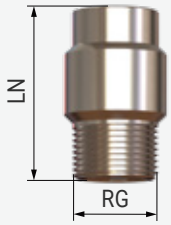

WELDING NIPPLE CODE	RG inch	LN mm	WEIGHT Kg
ZWC 0062 B2	G 1	62	0.65
ZWC 0066 B2	G 1	66	0.70

MATERIALS	
B2	Stainless Steel AISI 304

FLOW STABILIZER

FLOW STABILIZER CODE	LS mm	WEIGHT Kg	NOTES
XHV EG30 T1	93,5	0,11	with filter
XHV EG31 T1	138,5	0,15	with filter

MATERIALS		
T1	Body	Brass
	Filter	Brass
B31	Flow stabilizer	AISI 316 L s.s.

GASKET

GASKET CODE
VDA 24C1 T3

MATERIALS	
T3	Copper

NOZZLE

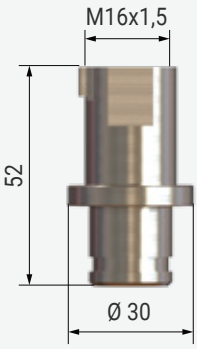

NOZZLE CODE	CAPACITY (lpm) PRESSURE (bar)					
	80	140	200	240	300	400
2045 F1AX	4,5	5,9	7,2	7,8	8,7	10,0
2063 F1AX	6,3	8,3	10,0	10,9	12,2	14,1
2106 F1AX	10,6	14,2	16,8	18,4	20,5	23,7
2134 F1AX	13,4	17,7	21,2	23,2	25,9	29,9
2162 F1AX	16,2	21,4	25,6	28,0	31,4	36,2
2208 F1AX	20,8	27,5	32,9	36,0	40,2	46,5
2250 F1AX	25,0	33,0	39,5	43,3	48,4	55,9
2320 F1AX	32,0	42,3	50,6	55,4	62,0	71,6
2402 F1AX	40,2	53,2	63,6	69,6	77,8	89,9
2520 F1AX	52,0	68,8	82,2	90,0	101	116
2642 F1AX	64,2	84,9	102	111	124	144
2798 F1AX	79,8	106	126	138	155	178
2996 F1AX	99,6	132	157	173	193	223
3112 F1AX	112	148	177	194	217	250
3120 F1AX	120	159	190	208	232	268

LOCKNUT

LOCKNUT CODE	NOTES	WEIGHT kg *average value
VAW B100 B1	outside hexagon	0,16*
VAW D100 B1	built in hexagon	0,24 *

MATERIALS	
B1	AISI 303 s.s.

HOW TO ORDER PNR PRODUCTS

MODEL	SPRAY ANGLE	CAPACITY	MATERIAL	TYPE
HV	C	2045	XX	AX

ORDER EXAMPLE
HVC 2045 F1AX

Type AM

HIGH IMPACT NOZZLES MICRO SIZE

In some plants the center-to-center distance between descaling nozzles can be very narrow. In these cases the use of micro-descaling tips avoids the installation of nipples and nozzles or rings onto the spray manifold, which would be difficult, if not impossible, with standard nozzles.

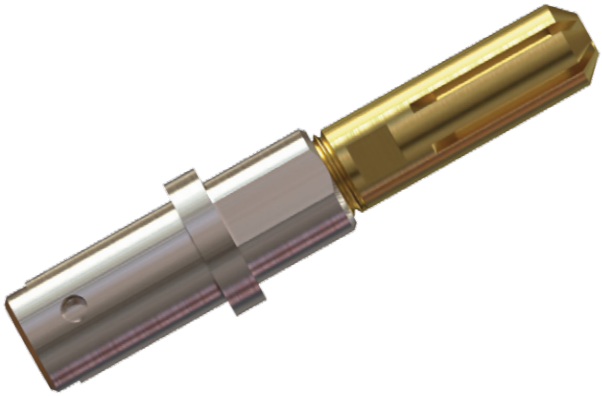

SPRAY ANGLE CODES			
HWC	HWE	HWF	HWL
22°	26°	30°	40°

MATERIALS			WEIGHT kg *average value
F1	Body	Stainless Steel AISI 303	0,16*
	Insert	Tungsten carbide	

SPRAY PATTERN

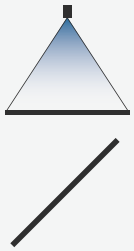

DIMENSIONS OF ASSEMBLED NOZZLES

NIPPLE	ZWM 0035 B2	
STABILIZER	A	B
XHW MG20 T1	56	35

A = Complete descaling unit length
B = Welding nipple length
C = Flow straightener protrusion

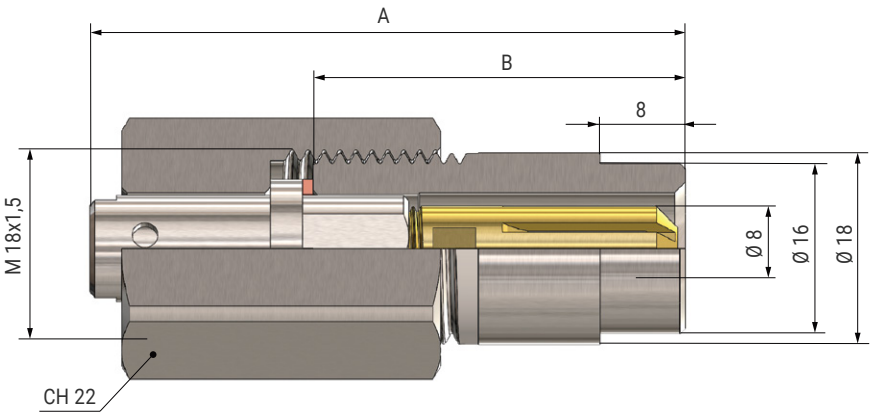

WELDING NIPPLE

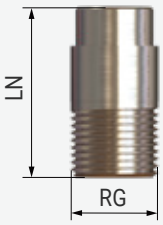

WELDING NIPPLE CODE	RG mm	LN mm	WEIGHT Kg
ZWM 0035 B2	M18x1,5	35	0.2

MATERIALS	
B2	Stainless Steel AISI 304

FLOW STABILIZER

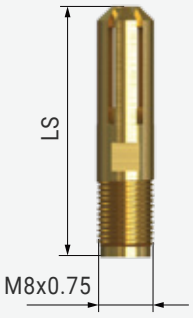

FLOW STABILIZER CODE	LS mm	WEIGHT Kg	NOTES
XHW MG20 T1	35	0.04	with filter

MATERIALS		
T1	Body	Brass
	Filter	Brass
B31	Flow stabilizer	AISI 316 L s.s.

GASKET

GASKET CODE
VDA 10A5 T3

MATERIALS	
T3	Copper

NOZZLE

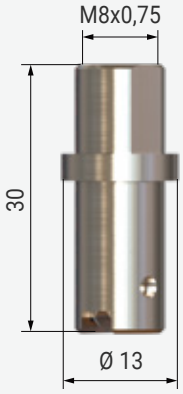

NOZZLE CODE	CAPACITY (lpm) PRESSURE (bar)					
	80	140	200	240	300	400
2045 F1AM	4,5	5,9	7,2	7,8	8,7	10,0
2063 F1AM	6,3	8,3	10,0	10,9	12,2	14,1
2106 F1AM	10,6	14,2	16,8	18,4	20,5	23,7
2134 F1AM	13,4	17,7	21,2	23,2	25,9	29,9
2162 F1AM	16,2	21,4	25,6	28,0	31,4	36,2
2208 F1AM	20,8	27,5	32,9	36,0	40,2	46,5
2250 F1AM	25,0	33,0	39,5	43,3	48,4	55,9

LOCKNUT

LOCKNUT CODE	NOTES	WEIGHT kg *average value
VAW MM18 B1	outside hexagon	0,06*

MATERIALS	
B1	AISI 303 s.s.

HOW TO ORDER PNR PRODUCTS

MODEL	SPRAY ANGLE	CAPACITY	MATERIAL	TYPE
HW	C	2045	XX	AM

ORDER EXAMPLE
HWC 2045 F1AM

DESCALING NOZZLE ACCESSORIES

ALIGNMENT NOZZLE

Alignment tips, with key flat surfaces suitably oriented according to angle α , are used for a correct alignmentof the welding nipples onto a manifold, so that nozzles produce flat jets with a given offset angle δ , as shown here below.

The orientation of the flat surface of PNR flat fan descaling nozzles is always constant β = 15°

The resulting offset angles of the nozzles installed onto the manifold are:

1) α = -30° → β = +15° → δ = -15°
2) α = -15° → β = +15° → δ = 0°
2) α = 0° → β = +15° → δ = +15°

NOTE: Clockwise rotations are considered positive, whereas counter-clockwise rotations are considered negative.

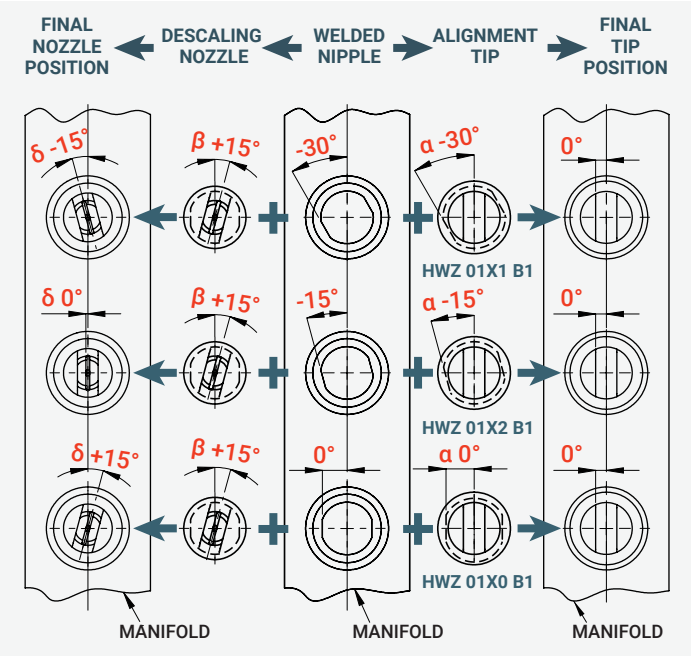

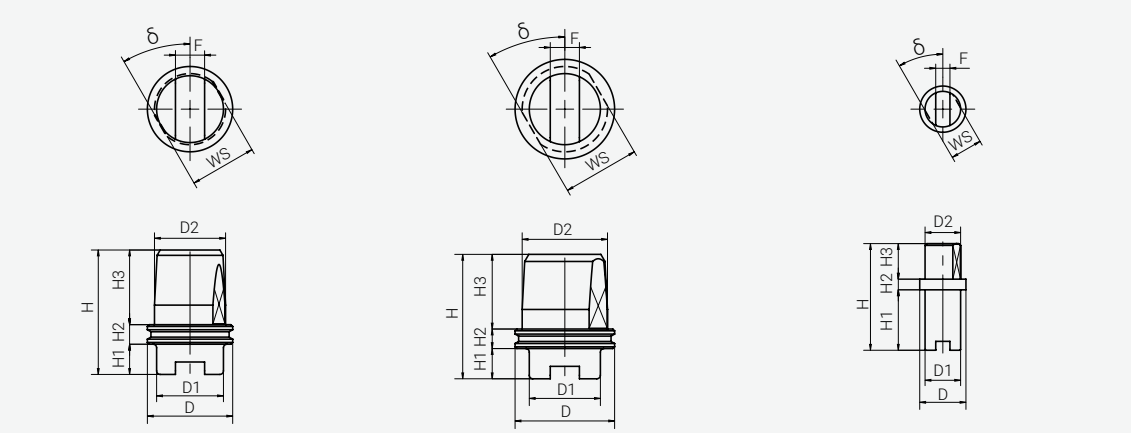

HWZ 01 Ax B1 HWZ 01 Cx B1 HWZ 01 Mx B1

CODING SCHEME FOR HWZ SERIES

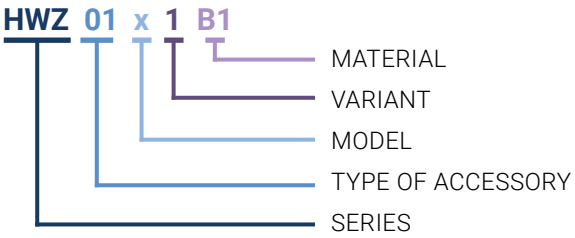

B1 = SS 303
1 = δ → -15°; 2 = δ → 0°; 3 = δ → +15°
A = MINI; C = STD; M = MICRO
01 = Alignment tips
HWZ

PRODUCT CODE	RESULTING NOZZLE ORIENTATION	δ	D	D1	D2	H	H1	H2	H3	WS	F
HWZ 01M1 B1	-15°	-30°	13	10	10	30	17	3	10	9	4
HWZ 01M2 B1	0°	-15°	13	10	10	30	17	3	10	9	4
HWZ 01M0 B1	+15°	0°	13	10	10	30	17	3	10	9	4
HWZ 01A1 B1	-15°	-30°	24	18,8	20	35	8,5	5,5	21	18,8	8
HWZ 01A2 B1	0°	-15°	24	18,8	20	35	8,5	5,5	21	18,8	8
HWZ 01A0 B1	+15°	0°	24	18,8	20	35	8,5	5,5	21	18,8	8
HWZ 01B1 B1	-15°	-30°	28	20	24	35	8,5	5,5	21	21,7	8
HWZ 01B2 B1	0°	-15°	28	20	24	35	8,5	5,5	21	21,7	8
HWZ 01B0 B1	+15°	0°	28	20	24	35	8,5	5,5	21	21,7	8

Note: Alignment nozzles are not available for range: HV/AX

EXTRACTION KIT

Nozzle tip is strongly secured to the nipple and its removal is not always easy and can cause damage to both parts. Disassembly kit allows a safe gripping of the nozzle and makes it easier to apply the tensile strength required to extract it from inside the nipple, for replacement or inspection. The kit is sold separately.

HWZ 05A0B1	HWZ 05C0B1
FOR NOZZLES	
HW/AA HW/AB HX/GB	HW/AH HW/AK HX/GK

Note: Extraction kit is not available for ranges: HW/AM and HV/AX

BUILT-IN HEXAGON KIT

The built-in hexagon nut is used:
- to protect nozzle from splinters at short spray height;
- to facilitate nut screwing at reduced pitches.

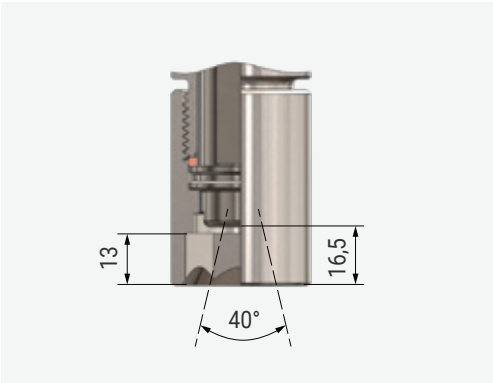

VAW C075B1	VAW MM18B1	VAW D100B1
FOR NOZZLES		
HW/AA HW/AB HX/GB	HW/AM	HW/AH HW/AK HV/AX HX/GK

PRODUCT WARRANTY

PNR products will be replaced or repaired at the option of PNR and free of charges if found defective in manufacturing, labelling and packaging. The above conditions will apply if notice of defects is received by PNR within 30 days from date of product installations or one year from date of shipment. The cost of above said replacement or repair shall be the exclusive remedy for any breach of any warranty, and PNR shall not be held liable for any damage due to personal injuries or commercial losses coming from product malfunction.
It is self-understood that no warranty may apply in case our products have been operated under nonacceptable conditions, like for example (but not limited to):

- operation at pressures exceeding those shown in catalogue performance table;
- operation with or exposure to liquids containing abrasive particles;
- operation with or exposure to liquids producing a chemical attack on the nozzle material;
- mechanical damages to nozzle orifices, nozzle spray edge or body due to careless handling or assembling.

In all above cases, the costumer must accept a nozzle life reduction below life expected, or performance parameters below the values in the catalogue.

The guarantee may be exercised as follows:
- by sending a precautionary report to PNR on the detected damages. This report can also be sent by email to this address: quality@pnr.it
- if PNR ascertains that the manufacturing faults are actually subject to the warranty, the product shall have be returned to the manufacturer in its original packaging prior request of authorization to the manufacturer and receipt of manufacturer's written authorization.
- the rejected goods shall have be returned by the means that PNR will communicate to the customer and the transportation costs of returned merchandise will be entirely borne by the manufacturer.

PRODUCT RETURN POLICY

PRODUCTS DELIVERED IN ERROR FROM PNR
1 Obtain from PNR a return authorization number;
2 return the products together with our Form 3DA A04 duly completed;
3 PNR shall issue a Credit Note for full Product and shipping costs.

PRODUCTS ORDERED INCORRECTLY TO PNR
1 Obtain from PNR a return authorization number;
2 return the products at your expense together with the form 3DA A04 duly completed;
3 products shall be returned in original condition, inside the original packaging;
4 a re-stocking change of 15% applies.

NON CATALOG PRODUCTS
These products can only be returned after a written authorisation from PNR has been obtained.

DISCLAIMER

Our products are manufactured with the best care and according to the latest developments of the technology available.
However we cannot assure that every one of our products is perfectly fit for every specific application. The information in this catalogue is provided "as seen" and so we offer no warranty of any kind with respect to the subject matter or accuracy of the information contained herein. This publication may include technical inaccuracies or typographical errors and changes may be periodically made to the information herein without prior notice.
As a result of continuous product improvement our documentation is regularly updated: please visit our website www.pnr.eu to be always updated.

COPYRIGHT

PNR PRODUCTS MATERIALS CODES

A1	Carbon steel
A2	High speed steel
A8	Zinc coated steel
A9	Nickel coated steel
B1	Stainless steel AISI 303
B2	Stainless steel AISI 304
B21	Stainless steel AISI 304L
B3	Stainless steel AISI 316
B31	Stainless steel AISI 316L
C1	S. S. AISI 420 hardened
C2	S. S. AISI 416 hardened
D1	Polyvinylchloride (PVC)
D2	Polypropylene (PP)
D3	Polyamide (PA)

D5	Talcum filled Polypropylene
D6	Glassfibre reinforced PP
D7	High density polyethilene
D8	Polyvinylidenefluoride (PVDF)
E0	EPDM
E1	Polytetrafluorethylene (PTFE)
E2	PTFE (15% glassfibers)
E31	Acetalic resin (POM)
E7	Viton
E8	Synthetic rubber (NBR)
F1	Tungsten carbide
F5	Ceramic
F31	Ruby insert, 303 body
G1	Cast iron

H1	Titanium
L1	Monel 400
L2	Incolloy 825
L8	Hastelloy C276
P6	Acr. But. Styrene (ABS)
P8	EPDM 40 Shore
T1	Brass
T2	Brass, chrome plated
T3	Copper
T5	Bronze
T8	Brass, nickel plated
T81	Brass, electroless nickel plated
V1	Aluminum
V7	Aluminum, electroless n. plated

LIST OF ABBREVIATIONS - LEGENDA

AE	Inlet air capacity	Nmc/min
AU	Outlet air capacity	Nmc/min
CL	Spray jet deflection angle	degrees
D	For round exit hole: hole diameter For not round exit holes: equivalent round hole diameter	mm
D1	Smallest passage diameter	mm
DE	Liquid inlet diameter	mm
DF	Flange nominal size for ANSI/ASME flanges	inch
DIA	Outer diameter	mm
DN	Flange nominal size for UNI/DIN flanges	mm
DU	Liquid outlet diameter	mm
DX	Nipple inner diameter	mm
FF	Flange outer diameter	mm
G	Diameter measured between fixing holes centers	mm
H, H1, H2	Height	mm

L, L1	Length	mm
LF	Pipe length	m
LP	Maximum operating pressure	bar
LQ	Maximum capacity	lpm
LT	Maximum operating temperature	°C
NR	Number of orifices	-
QC	Quick coupling connection	-
RA	Radius	mm
RF	Parallel female thread BSPP	inch
RG	Tapered male thread BSPT	inch
S	Thickness	mm
SQ	Square bar size	mm
W	Weight	g, Kg
WS	Wrench size	mm

NOTES

PNR ITALIA QUALITY SYSTEM
IS CERTIFIED ISO 9001:2015

COMPANY WITH
QUALITY SYSTEM
CERTIFIED BY DNV GL **ISO 9001:2015**

A GLOBAL PRESENCE ALL OVER THE WORLD.

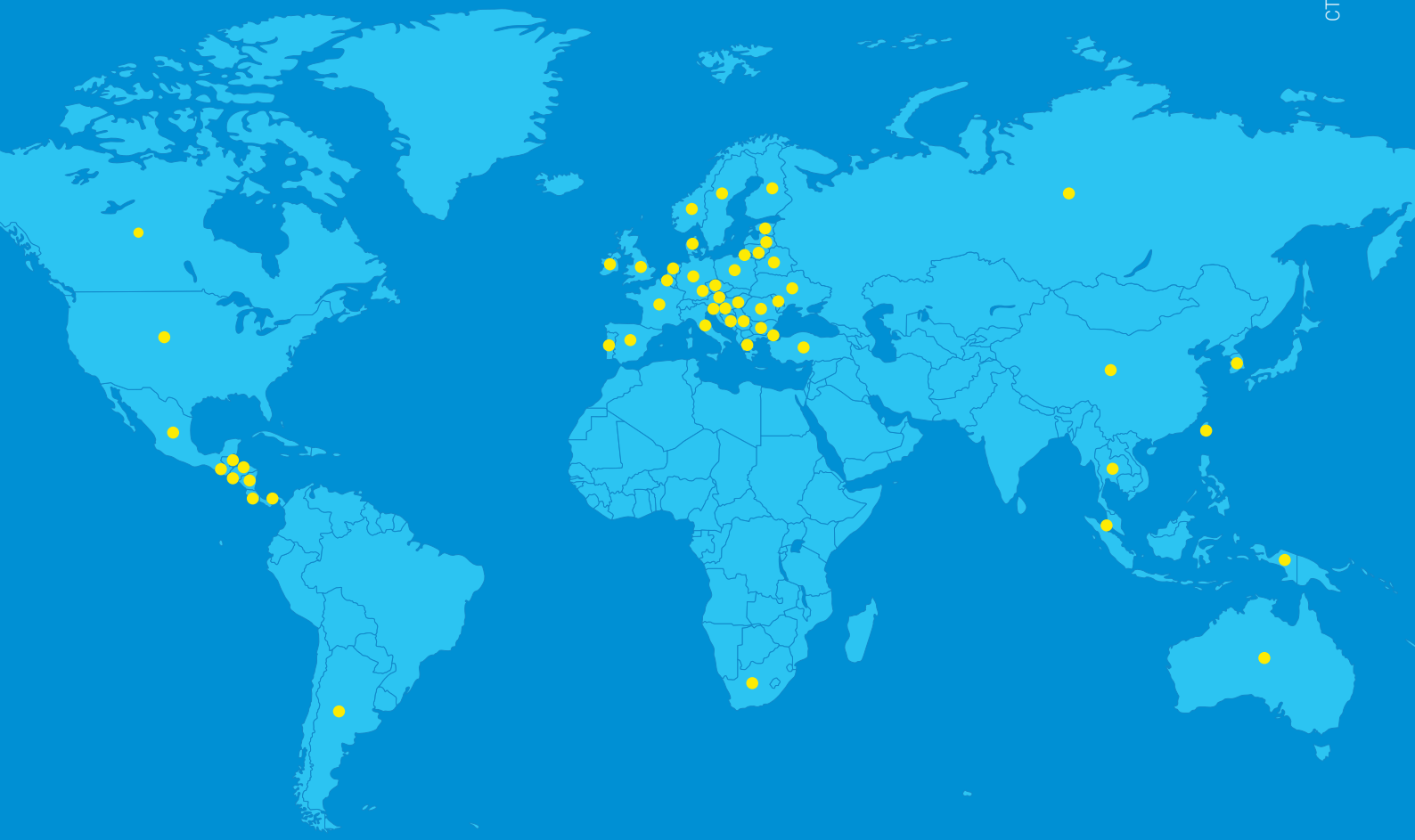

PNR ITALIA SRL
Via Gandini 2, 27058 Voghera (PV) Italy
For more information, visit www.pnr.eu

Call or write us for customized solutions!
+39 0383 344 611 info@pnr.it